EMPOWERING PROCESS MANAGEMENT

RTD (RESISTANCE TEMPERATURE DETECTORS)

RTDs are based on principles that the measuring RTD element produces Ohms (Ω) when heated in proportional to its change in temperature. RTD elements have a predictable and repeatable relationship between temperature and Ohms. Many type of RTD Elements are available such as **PT 100, PT 500, PT 1000**. The most commonly used is **RTD PT 100**.

RTD PT 100 has **100 Ohms (Ω) at 0 ºC** and when heated it produces Ohms in proportion to change in temperature. Resistance Temperature Detectors (RTDs) are used for industrial temperature measurements where high accuracy and long-term stability are required

TOLERANCE of RTD ELEMENT:

Tolerance of an RTD is a measure of its conformity to the ITS-90 Temperature-Resistance curve, and is normally expressed as an **allowable deviation from the normal resistance at 0 ºC**. It consists of a manufacturing tolerance on the reference point (eg: how close is the resistance to 100 Ω at 0 ºC) and a materials tolerance on the Temperature Coefficient of Resistance (eg: how close does the wire conform to an alpha of 0.00385).

At the reference temperature, only the manufacturing tolerance applies (since this is where the RTD element is "adjusted" to 100 Ω). At other temperatures, the materials tolerance must be added. As the temperature increases or decreases, the tolerance becomes wider. At higher temperatures, the material tolerance has the larger influence.

DIN/IEC 60751 (replaces DIN 43760) defines Class B and Class A tolerances.

Temperature	Resistance	Class A		Class B	
ºC	Ω (Ohms)	Ω (Ohms)	ºC	Ω (Ohms)	ºC
-200	18.52	±0.24	±0.55	±0.56	±1.30
-100	60.26	±0.14	±0.35	±0.32	±0.80
0	100.00	±0.06	±0.15	±0.12	±0.30
100	138.51	±0.13	±0.35	±0.30	±0.80
200	176.86	±0.20	±0.55	±0.48	±1.30
300	212.05	±0.27	±0.75	±0.64	±1.80
400	247.09	±0.33	±0.95	±0.79	±2.30
500	280.98	±0.38	±1.15	±0.93	±2.80
600	313.71	±0.43	±1.35	±1.06	±3.30
650	329.64	±0.46	±1.45	±1.13	±3.60
700	345.28	- - -	- - -	±1.17	±3.80
800	375.70	- - -	- - -	±1.28	±4.30
850	39048	- - -	- - -	±1.34	±4.60

Elements with narrower tolerances are available (eg: 1/3 B, 1/5 B, etc). No standard exists for these fractional tolerance elements; it depends on the manufacturer of the element. For example, a 1/10 B element would normally have a manufacturing tolerance of 0.03 ºC, but the material tolerance would depend on the manufacturer's choice of wire (class B, class A or other).

Accuracy is dependent on the tolerance of the RTD, the measurement temperature, the accuracy of the readout device, the effects of the interconnecting lead wire and the installation.
Platinum elements with other temperature-resistance curves are available (eg: JIS). Copper and Nickel elements are also available as replacements to match existing instrumentation.

ELTEC CABLES & INSTRUMENTS
16, Bhaktinagar Station Plot, Rajkot-360 002. INDIA.
Tel. : +91 281 2480400 URL : www.thermocouplewire.co.in
E-mail : eltecin@gmail.com | sales@thermocouplewire.co.in

EMPOWERING PROCESS MANAGEMENT

RTD LEAD WIRE CONFIGURATION

Two Wire :

Provides one connection to each end of the element. This construction is suitable where the resistance of the lead wire may be considered as an additive constant in the circuit, and particularly where the changes in lead resistance due to ambient temperature changes may be ignored.

Three Wire :

Provides one connection to one end of the element and two to the other end of the element. Connected to an instrument designed to accept three wire input, sufficient compensation is usually achieved for lead wire resistance and temperature change in leadwire resistance. This is the most commonly used configuration.

Four Wire :

Provides two connections to each end of the element to completely compensate for lead wire resistance and temperature changes in the leadwire. This configuration is used where highly accurate temperature measurement is vital.

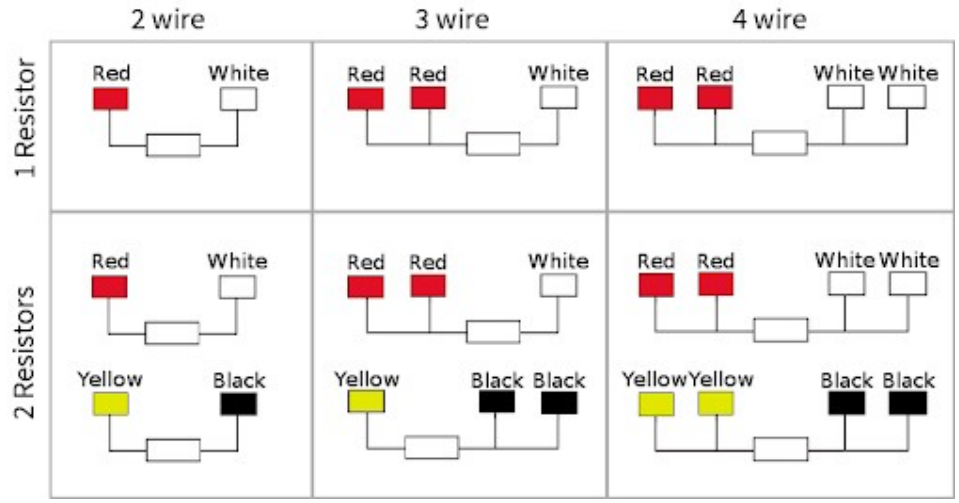

PRODUCT FEATURES

- RTD Elements such as PT 100 / PT 500 / PT 1000.
- Highly accurate & Stable Probes.
- Rugged Construction.
- Wide Temperature Range from -200 °C to 850 °C.
- 2 wire, 3 wire & 4 wire Simplex & Duplex Configuration.
- Probes & Assemblies in various sizes & configuration.
- Various mounting options like Adaptors, Adj. Ferrule fittings, flanged connection, Nipple – Union – Nipple.
- Lead styles include miniature jack, miniature plug, pin leads, standard plugs, stripped lengths, and high and ultra-high temperature plugs.
- Custom Configuration.
- Industrial Safety Enclosure like Die Cast Aluminium Head or SS Head confirming to IP 65, IP 67 & IS Protection.
- Head Mount Transmitter Options.

ELTEC CABLES & INSTRUMENTS
16, Bhaktinagar Station Plot, Rajkot-360 002. INDIA.
Tel. : +91 281 2480400 URL : www.thermocouplewire.co.in
E-mail : eltecin@gmail.com I sales@thermocouplewire.co.in

eltec

EMPOWERING PROCESS MANAGEMENT

JAS-ANZ

BAYONET & FLEXIBLE RTD CABLE PROBES

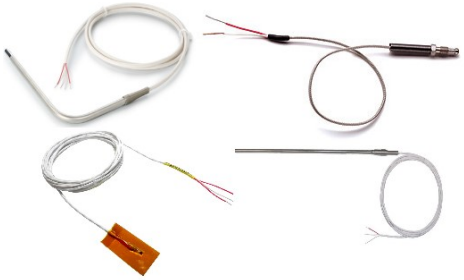

Bayonet RTD have a compressible spring and locking cap for quick insertion and detachment. Other probes connections like washer, button, plate, ribbons, ball, nozzles, bolts etc are beings used to manufacture flexible RTD Probes to suit various critical temperature measuring applications.

They are available with no protection tube (insulation only), armour clad flexible tube, or stainless steel over braid. All are light weight for easy connection to an instrument or a distant junction box.

APPLICATIONS	PRODUCT FEATURES
• ***Plastic Extrusion Machines, Diversified Plastic & Packing Machinery***	• ***Locking cap / spring / screwed bolts / bayonet adaptors for quick & easy attachment & detachment***
• ***Automobiles & Engine Testing, Gen set***	• ***Fixed & Adjustable lengths***
• ***Medical & Scientific Equipments***	• ***Wide Industrial applications***
• ***Food, Pharma & Beverages***	• ***Higher Accuracy & Stability.***
• ***Various Industrial Machineries***	• ***2 wire, 3 wire, 4 wire configuration***
• ***Measuring Bearing Temperature in Motors, Turbines etc.***	• ***Customized probes for measuring temperature for critical industrial applications***

PRODUCT TECHNICAL SPECIFICTIONS:	
Element	**RTD PT 100 (100 Ohms) at 0 ºC** **RTD PT 200 (200 Ohms) at 0 ºC** **RTD PT 500 (500 Ohms) at 0 ºC** **RTD PT 1000 (1000 Ohms) at 0 ºC**
No. of Element	***Simplex / Duplex***
Wire Configuration	***2 wire, 3 wire, 4 wire for SIMPLEX and 4 wire, 6 wire for Duplex***
Sensor Wire Insulation	***Fiber Glass, High Temperature Ceramic Yarn, PTFE, PFA, ETFE, SILICONE RUBBER, KAPTON, PVC etc.***
Sheath OD	***3mm to 8mm***
Sheath Material	***SS Tubes / Brass Tubes***
Mounting	***Bayonet Adaptor or Probe itself becomes suitable to be fixed at temperature measuring position***
Termination / Enclosure	***Seal Pot with flying leads*** ***Seal Pot with Male Female Connectors*** ***Flying leads fitted with cable lugs***

RTD Probes can be custom configured depending upon its environmnetal condtions & its probe can be designed as per demanding applications within the above TECHNICAL CONSTRUCTIONAL SPECIFICATIONS.

ELTEC CABLES & INSTRUMENTS
16, Bhaktinagar Station Plot, Rajkot-360 002. INDIA.
Tel. : +91 281 2480400 URL : www.thermocouplewire.co.in
E-mail : eltecin@gmail.com | sales@thermocouplewire.co.in

EMPOWERING PROCESS MANAGEMENT

INDUSTRIAL RTD PIPE ASSEMBLIES

*Industrial RTD Assemblies are more stable and highly accurate and normally manufactured for temperature range up to **400 ºC** and higher on request.*

APPLICATIONS	PRODUCT FEATURES
• *High accuracy sensor for use in Industrial & Laboratory applications*	• *Wider temperature range from -200 C to 450 ºC and higher up to 850 ºC on request*
• *Food, Pharmaceuticals & Medical Equipments*	• *High Accuracy & Stability*
• *Temperature Measurement in Chemical Reactors & General Industrial applications*	• *Variety of Sheath Material for use in different industrial environmental conditions.*
• *Pulp & Paper Industry*	• *2 wire, 3 wire, 4 wire configuration.*

PRODUCT TECHNICAL SPECIFICTIONS:	
Element	RTD PT 100 (100 Ohms) at 0 ºC RTD PT 200 (200 Ohms) at 0 ºC RTD PT 500 (500 Ohms) at 0 ºC RTD PT 1000 (1000 Ohms) at 0 ºC
No. of Element	*Simplex / Duplex*
Wire Configuration	*2 wire, 3 wire, 4 wire*
Accuracy	*Class A / Class B as per DIN 60751*
Sheath OD	*1.5 to 10 mm or even more on request*
Sheath Length	*Rigid up to 1000 mm & up to 20000 mm for MI RTDs*
Sheath Material	*SS 316 or other on request*
Mounting	*Fixed Threaded, Adj. Ferrule fittings, Flanged, Nipple Union Nipple etc.*
Termination	*Flame Proof or Weather Proof Head with Single, Double entry from Cast Aluminium / Cast Iron / SS / Plastic* *Ceramic Terminal Block with Nickel Plated Brass Terminal & Optional spring loaded Terminal* *Ceramic Terminal Block with SS Base Plate* *SS Base Plate with flying leads for Temperature Transmitter*
Enclosure	*Weatherproof & Explosion Proof Head with Double Entry & Single Entry Cable Entry of Alu. Die Cast & Stainless Steel*
Optional Accessories	*Thermo well for external sensor protection, Head mounted transmitter etc. & Extension Wire*

RTD Assemblies can be custom configured & designed depending upon its environmnetal condtions & its demanding applications within the above TECHNICAL CONSTRUCTIONAL SPECIFICATIONS

ELTEC CABLES & INSTRUMENTS
16, Bhaktinagar Station Plot, Rajkot-360 002. INDIA.
Tel. : +91 281 2480400 URL : www.thermocouplewire.co.in
E-mail : eltecin@gmail.com | sales@thermocouplewire.co.in

eltec

EMPOWERING PROCESS MANAGEMENT

JAS-ANZ

RTD PIPE ASSEMBLIES with CONNECTION HEAD ORDERING CODE

# 1	TS RTD
PT 100	PT 100
PT 500	PT 500
PT 1000	PT 1000
PT XXX	PT XXX – Any other, pl. specify

# 2	ELEMENT (No. of wire & Accuracy)
S2 A / B	*Simplex 2 Wire & Accuracy Class A / Class B*
S3 A / B	*Simplex 3 Wire & Accuracy Class A / Class B*
S4 A / B	*Simplex 4 Wire & Accuracy Class A / Class B*
D2 A / B	*Duplex 2 Wire & Accuracy Class A / Class B*
D3 A / B	*Duplex 3 Wire & Accuracy Class A / Class B*

#3	Type of Insulation
--	*As per manufacturing standards*
MI	*Mineral Insulation*

# 4	Sheath Material
316	*SS 316*
304	*SS 304*
X	*Other than above, please specify*

# 4	Sheath Diameter
4.5	*OD – 4.5 mm*
5	*OD – 5 mm*
6	*OD – 6 mm*
8	*OD – 8mm*
10	*OD – 10 mm*
12	*OD – 12 mm*
X	*Others please specify*

# 5	Sheath Length – Insertion length below Process Connection
X in mm	*55 to 20000 mm, please specify*

# 6	Process Connection
--	*None*
B1	*¼" BSP*
B2	*½" BSP*
N1	*¼" NPT*
N2	*½" NPT*
X	*Flanged or any others, please specify in details*

# 7	Type of Process Connection
F	*Fixed*
A	*Adjustable*
N	*Nipple*
NU	*Nipple Union*

# 8	Enclosure
E1	*Weather Proof Die Cast Alu. Head IP 65 / 67*
E2	*Flame Proof Die Cast Alu. Head*
E3	*Explosion Proof*

# 9	Optional Accessories
---	*None*
Tx	*Head Mount Temperature Transmitter*
XM	*X is wire length in meters*
TW	*Thermo well (Separate details)*

TS RTD	PT 100	S3A	MI	316	6	1000	B1	A	E1	Tx - 3M

TS RTD PT 100 S3A MI 316 6 1000 B1 A E1 T – 3M

RTD PT 100 Simplex 3 Wire Accuracy Class A, Sheath : SS 316, OD: 6mm, Legth: 100 mm, ½ " BSP Adjustable Connection, Weatherproof Enclosure with Head Mount Temperature Transmitter & 3 Meter wire length

ELTEC CABLES & INSTRUMENTS

16, Bhaktinagar Station Plot, Rajkot-360 002. INDIA.

Tel. : +91 281 2480400 URL : www.thermocouplewire.co.in

E-mail : eltecin@gmail.com | sales@thermocouplewire.co.in

eltec

EMPOWERING PROCESS MANAGEMENT

JAS-ANZ

RTD PLUG & JACK ASSEMBLIES ORDEING CODE

# 1	TS RTD
PT 100	PT 100
PT 500	PT 500
PT 1000	PT 1000
PT XXX	PT XXX – Any other, pl. specify

# 2	ELEMENT (No. of wire & Accuracy)
S2 A / B	*Simplex 2 Wire & Accuracy Class A / Class B*
S3 A / B	*Simplex 3 Wire & Accuracy Class A / Class B*
S4 A / B	*Simplex 4 Wire & Accuracy Class A / Class B*
D2 A / B	*Duplex 2 Wire & Accuracy Class A / Class B*
D3 A / B	*Duplex 3 Wire & Accuracy Class A / Class B*

#3	Type of Insulation
--	*As per manufacturing standards*
MI	*Mineral Insulation*

# 4	Sheath Material
316	*SS 316*
304	*SS 304*
X	*Other than above, please specify*

# 4	Sheath Diameter
4.5	*OD – 4.5 mm*
5	*OD – 5 mm*
6	*OD – 6 mm*
8	*OD – 8mm*
12	*OD – 12 mm*
X	*Others please specify*

# 5	Sheath Length – Insertion length below Process Connection
X in mm	*55 to 20000 mm, please specify*

# 6	Process Connection
--	*None*
B1	*¼" BSP*
B2	*½" BSP*
N1	*¼" NPT*
N2	*½" NPT*
X	*Flanged or any others, please specify in details*

# 7	Type of Process Connection
F	*Fixed*
A	*Adjustable*
N	*Nipple*
NU	*Nipple Union*

# 8	Connector
M	*Male Connector 3 Pin for 3 wire & 2 Pin for 2 wire*
F	*Female Connector 3 Pin for 3 wire & 2 Pin for 2 wire*
MF	*Male – Female Connector 3 Pin for 3 wire & 2 Pin for 2 wire*

# 9	Optional Accessories
---	*None*
XM	*X is wire length in meters*
TW	*Thermo well (Separate details)*

TS RTD	PT 100	S3A	MI	316	6	1000	B1	A	MF	3M

TS RTD PT 100 S3A MI 316 6 1000 B1 A MF – 3M

RTD PT 100 Simplex 3 Wire Accuracy Class A, Sheath : SS 316, OD: 6mm, Legth: 100 mm, ½ " BSP Adjustable Connection, Weatherproof Enclosure with Male Female Connector & 3 Meter wire length

ELTEC CABLES & INSTRUMENTS

16, Bhaktinagar Station Plot, Rajkot-360 002. INDIA.

Tel. : +91 281 2480400 URL : www.thermocouplewire.co.in

E-mail : eltecin@gmail.com | sales@thermocouplewire.co.in

eltec

EMPOWERING PROCESS MANAGEMENT

CERTIFICATIONS:

RICL

Facilitating Businesses for Enhanced Efficiency

Certificate of Registration

This is to certify that

Eltec Cables & Instruments

16, Bhaktinagar Station Plot, Rajkot - 360002 (Gujarat), India.

has been assessed by RICL and found to comply with the requirements of

ISO 9001 : 2015

Quality Management System

For the following activities:

Manufacturer and Exporter of Thermocouple Wires & Cables, RTD Cables, Instrumentation Cables, High Temperature PTFE, Fiber Glass Wires & Cables, Temperature Sensors such as Thermocouple, RTD PT 100 & Thermowell.

This Certificate is Valid from 13/01/2020 Until 12/01/2021

Date of Initial Certification: 13/01/2020
Ist Surveillance on or before: 12/12/2020
IInd Surveillance on or before: 12/12/2021
Certification Valid Until: 12/01/2023

Certificate No.:
20RQ01AH

Director
Royal Impact Certification Ltd.
Certificate details entered into JAS-ANZ register on 13/01/2020

MEMBER OF MULTILATERAL RECOGNITION ARRANGEMENT IAF

JAS-ANZ

www.jas-anz.org/register

623, Tower-B, iThum, Plot No. A - 40, Sector - 62, Noida 201301, India.
www.isointernational.org, info@isointernational.org
Phone : +91 120 4113893
This Certificate can be verified at: www.isointernational.org and www.jas-anz.org

This Certificate remains the property of Royal Impact Certification Limited. Must be returned on request or if certificate is withdrawn. Validity of this certificate is subject to successful surveillance audits. RICL is accredited by JAS-ANZ. URL of Joint Accreditation System of Australia & New Zealand- www.jas-anz.org/register

EMPOWERING PROCESS MANAGEMENT

CERTIFICATIONS:

PROGRESSIVE

PRODUCT CERTIFICATE
EC Attestation of Conformity

ELTEC CABLES & INSTRUMENTS

Address : 16, BHAKTINAGAR STATION PLOT, RAJKOT - 360002, GUJARAT - INDIA.

Is in compliance with Directive

LVD/HVD - 2004/108/EC, 94/9/EC, 2006/95/EC, 2006/42/EC

For The following product

THERMOCOUPLE WIRES,
RTD CABLES,
INSTRUMENTATION CABLES,
HIGH TEMPERATURE PTFE,
FIBER GLASS WIRES & CABLES,
TEMPERATURE SENSORS THERMOCOUPLE,
RTD PT 100.

In accordance with
TCF No. CE/01

The present certificate exclusively refers to the product above identified, in accordance to TCF submitted in PICL. Any Changes or modification implemented on the mentioned Product will not be covered by this certificate.

Registration No.:PICL/CE/1016/8896
Certificate Issue Date: 22.10.2016
1st Surveillance: 10.2017
2nd Surveillance: 10.2018

Certificate Expire Date: 21.10.2021
4th Surveillance: 10.2020
3rd Surveillance: 10.2019

Head of Certificate

This Certificate of Registration is granted subject to the Regulations approved by the Board.
PROGRESSIVE INTERNATIONAL CERTIFICATIONS LTD.
Office 4, 219, Kensington High Street, Kensington, London, W8 6BD, England.
E-mail.: info@picluk.com, Website: www.picluk.com
For current validity of this certificate. Please visit our website

Certificate of Registration

PROGRESSIVE

The Governing Board of
Progressive International Certifications Limited
hereby grant to:

ELTEC CABLES & INSTRUMENTS

Address to which this Certificate refers:

16, BHAKTINAGAR STATION PLOT, RAJKOT - 360002, GUJARAT - INDIA.

RoHS

(Directive - 2011/65/EU)

The certificate of compliance is based on a test procedure or an evaluation of the above-mentioned product. This is to certify that the above-mentioned product is in compliance with the RoHS Directive (2011/65/EU) of the European parliament and commission Decision on the Restriction of the certain Hazardous Substances [Lead (pb): Mercury (Hg): cadmium (cd): Hexavalent chromium (cr): polybrominated biphenyls (pBBs) and polybrominated diphenyl ethers (PBDEs)] in Electrical and Electronic equipment

Approved Scope to which this Certificate refers

THERMOCOUPLE WIRES & CABLES, RTD CABLES, INSTRUMENTATION CABLES, HIGH TEMPERATURE PTFE, FIBER GLASS WIRES & CABLES, TEMPERATURE SENSORS THERMOCOUPLE, RTD PT 100.

Certificate No.: PICL/ROHS/0317/8354
Certificate Issue Date: 02.03.2017
1st Surveillance: 03.2018

Certificate Expire Date: 01.03.2020
2nd Surveillance: 03.2019

Head of Certificate

QM 005

This Certificate of Registration is granted subject to the Regulations approved by the Board.
PROGRESSIVE INTERNATIONAL CERTIFICATIONS LTD.
Prakruti, Plot No. 03, Sector 21 Kharghar, Navi Mumbai - 410210, India.
Ph. +91 8080091139, E-mail.: info@progressiveltd.com, Website: www.progressiveltd.com
For current validity of this certificate. Please visit our website

USE OF ACCREDITATION MARK INDICATES ACCREDITATION IN RESPECT OF THE ACTIVITIES COVERED BY ACCREDITATION INSTITUTE ASSESMENT BODY (EUROPE) CERTIFICATION NUMBER 005

ELTEC CABLES & INSTRUMENTS
16, Bhaktinagar Station Plot, Rajkot-360 002. INDIA.
Tel. : +91 281 2480400 URL : www.thermocouplewire.co.in
E-mail : eltecin@gmail.com I sales@thermocouplewire.co.in